1100615752
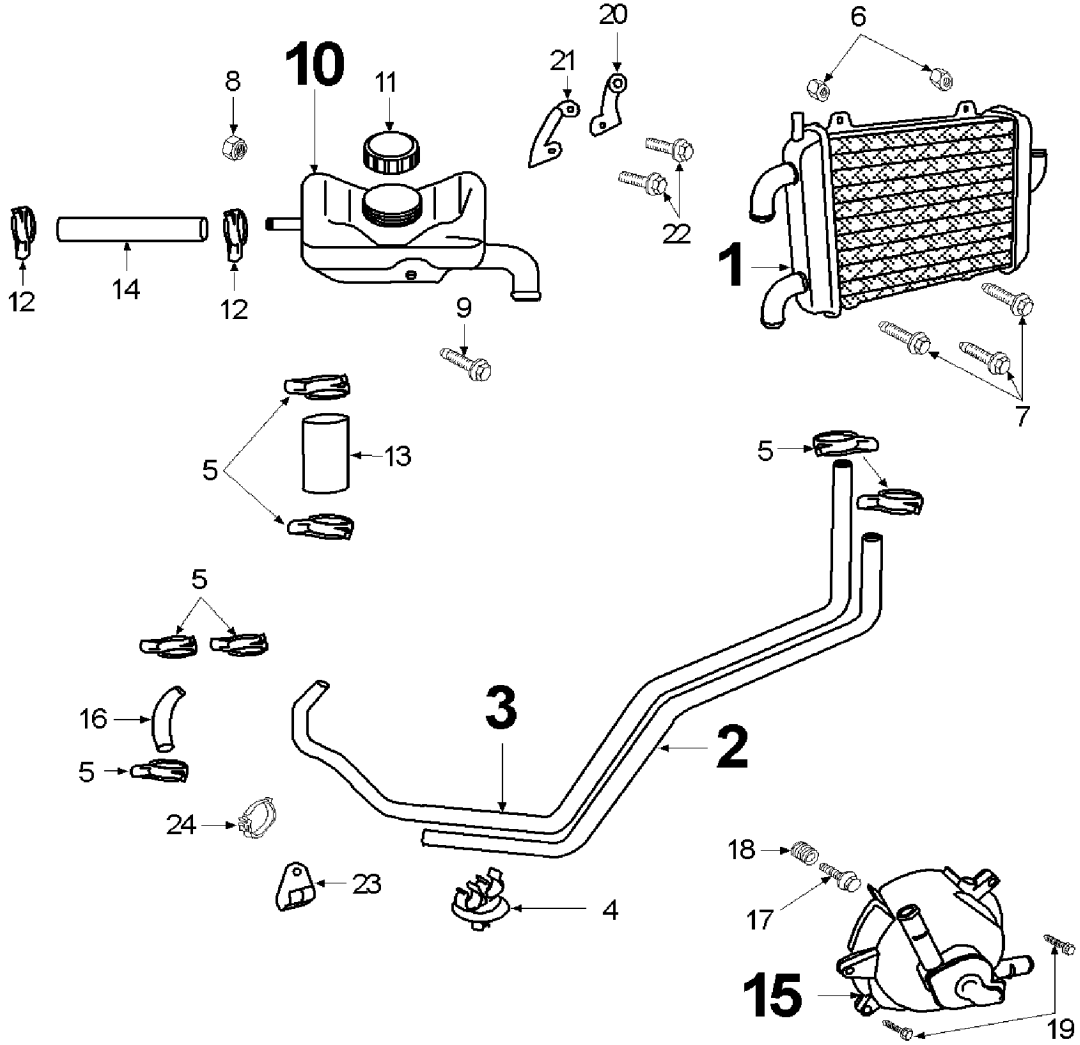
Ref.	Rep.	Designation
748866	1	RADIATOR WITH CAP
754179	2	TUBE COLD WATER (L=115)
754180	3	TUBE WARM WATER (L=145)
737625	4	BRACKET
736764	5	TUBE CLIP D=25
756457	6	HEXAGON NUT M5X0,80
718878	7	FLANGE SCREW 5X0,80-10
834007	8	LOCKNUT M5X0.80
743607	9	FLANGE SCREW RLXS M5X0,80-4,7
749277	10	WATERTANK
736667	11	CAP
736765	12	TUBE CLIP 1/2 D=14
736766	13	CONNECTING HOSE 25X17,2-75
736767	14	CONNECTING HOSE 14X7,4-130
743278	15	WATER PUMP
734427	16	PUMP-CYLINDER HOSE
706560	17	FLANGE SCREW M6X1,00-25
734930	18	DAMPER
730556	19	FLANGE SCREW 6X1,00-25
736583	20	LH BRACKET
736103	21	RH BRACKET
704937	22	FLANGE SCREW M6X1,00-12
737648	23	CLIP
738112	24	TUBE CLIP 16/27