1100661552
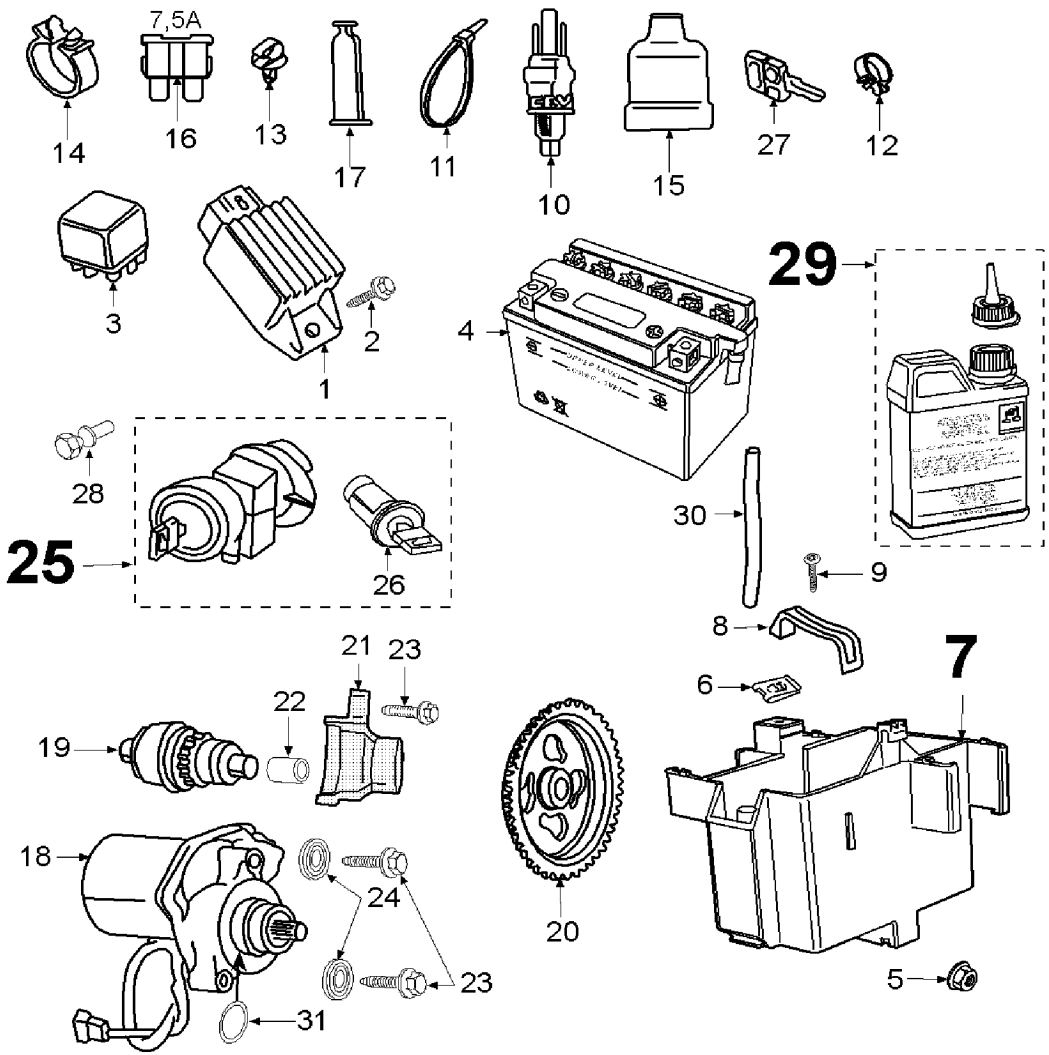
Ref.	Rep.	Designation
735871	1	REGULATOR
727562	2	FILLISTER-CURVED-WIDE HEAD 6-12
738903	3	STARTER RELAY (YELLOW)
700096	4	BATTERY 12V-4AH
837013	5	FLANGE NUT M6X1,00
734241	6	CLIP NUT 5X0,80
766726	7	BATTERY BRACKET
734115	8	CLAMP
767148	9	ROUND-HEAD SCREW M5X0,80-14
743154	10	STOP-LIGHT SWITCH (NYLON)
885024	11	PLASTIC COLLAR 3,6 L=281
714339	12	CLIP
728276	13	CLIP 23/17,4
061950	14	CLIP
734191	15	CAP
755761	16	FUSE 7.5 A
056310	17	CAP
744049	18	STARTER MOTOR SM10
735111	19	SPROCKET SM10216
748589	20	STARTER RING GEAR
749970	21	BUSH TORQUE LINK
728849	22	SHOULDER 8-12-8
730556	23	FLANGE SCREW 6X1,00-25
858051	24	SPRING WASHER 6-12-1.2
761160	25	STEERING LOCK
757206	26	SADDLE LOCK + KEY
752217	27	BLANK KEY
745787	28	SELF BREAKING NUT M8X1,25
739733	29	ELECTROLYTE 50 CL
061764	30	TUBE (PER METER)
754264	31	O'RING SEAL 2,4-19,3