1100790451
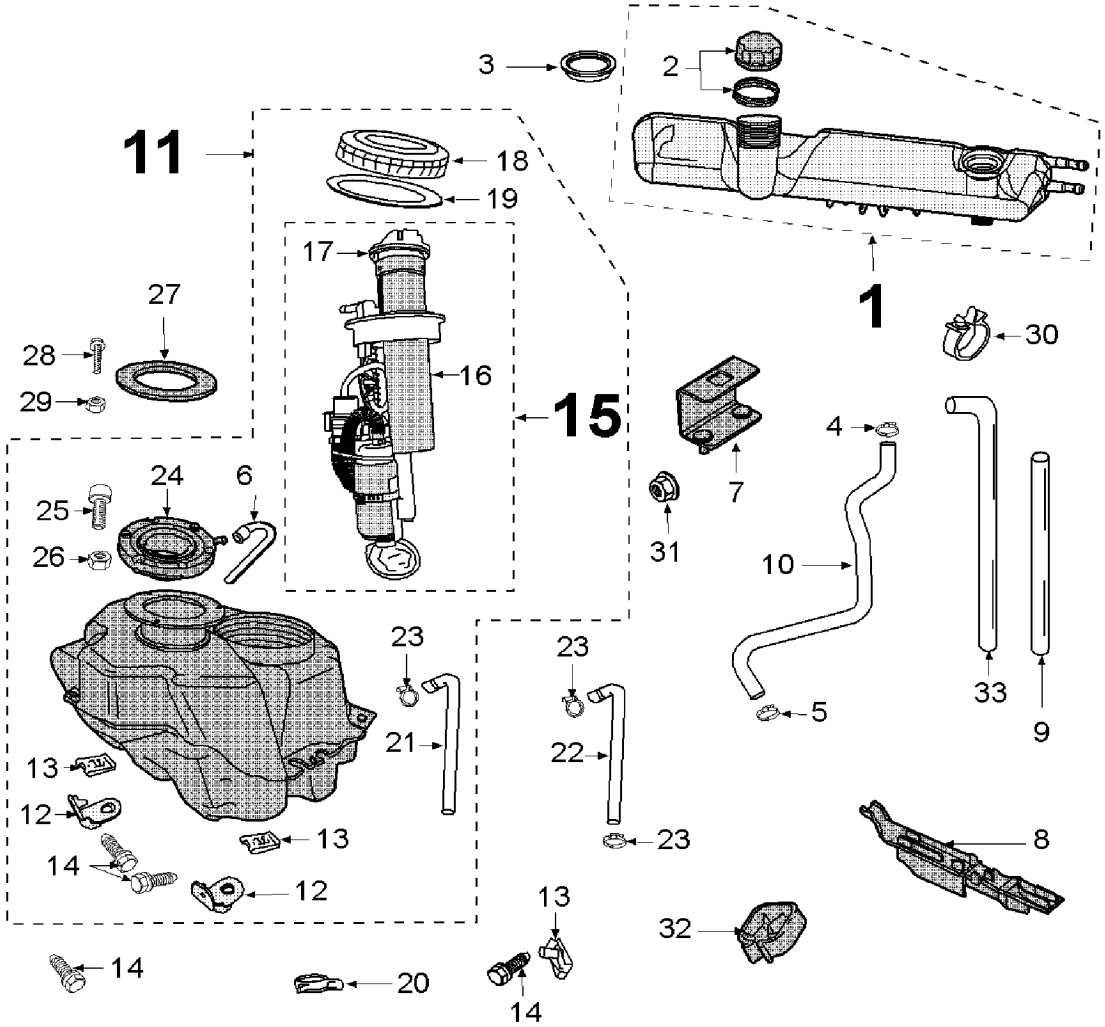
| Ref. | Rep. | Designation |
|---|---|---|
| 748654 | 1 | OIL TANK |
| 742288 | 2 | OIL TANK CAP + OIL RING |
| 740060 | 3 | OIL TANK GASKET |
| 711731 | 4 | SPRING CLIP COBRA O22/23-8 |
| 745635 | 5 | TUBE CLIP D 23 |
| 760398 | 6 | HOSE 5 X 10 - 700 |
| 749229 | 7 | BRACKET |
| 760399 | 8 | BRACKET |
| 748651 | 9 | HOSE 5X10-480 |
| 748653 | 10 | HOSE 15,2X22,5-696 |
| 748650 | 11 | FUEL TANK |
| 749621 | 12 | BRACKET |
| 742355 | 13 | SELF-TAPPING NUT 6X1,00 |
| 705008 | 14 | FLANGE SCREW M6X1,00-20 |
| 749730 | 15 | FUEL INJECTION MODULE |
| 748647 | 16 | DIPSTICK |
| 756681 | 17 | GASKET |
| 747347 | 18 | SPECIAL NUT |
| 747348 | 19 | GASKET |
| 745243 | 20 | SPRING CLIP COBRA O11,5-8 |
| 748655 | 21 | HOSE 7 X 13 - 1200 |
| 760410 | 22 | HOSE 5,7X107-550 |
| 747409 | 23 | TUBE CLIP O86/115 |
| 749117 | 24 | COLLECT |
| 717855 | 25 | HEAD CAP SCREW M5X0,80-20 |
| 834007 | 26 | LOCKNUT M5X0.80 |
| 748864 | 27 | EMBELLISHER |
| 740628 | 28 | HEAD CAP SCREW M4X0,70-16 |
| 710367 | 29 | NUT 4X0,70 |
| 746860 | 30 | CLIP 30/25 |
| 837013 | 31 | FLANGE NUT M6X1,00 |
| 760543 | 32 | CLIP |
| 767919 | 33 | HOSE O 6X12-700 |