1100789951
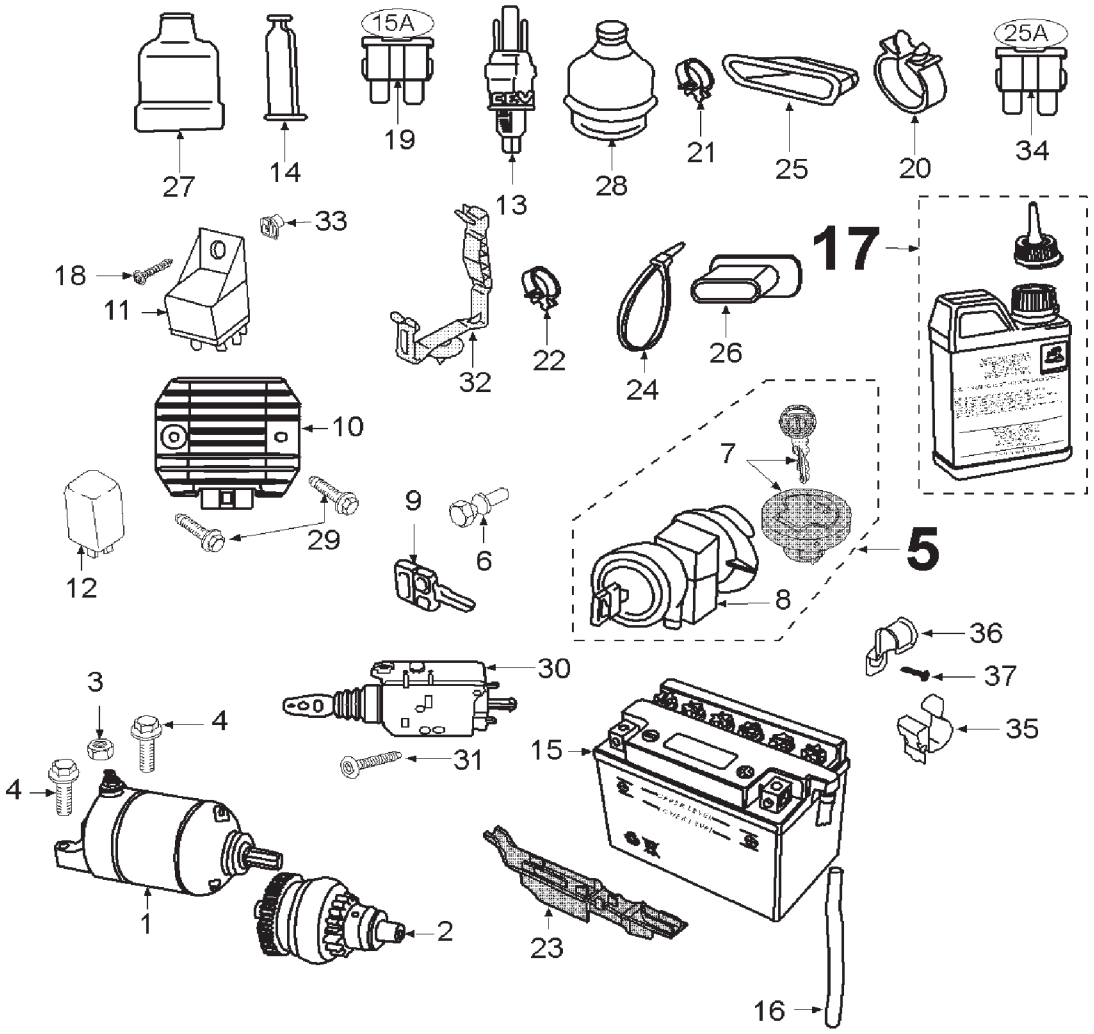
Ref.	Rep.	Designation
737544	1	STARTER MOTOR
737545	2	SPROCKET
837013	3	FLANGE NUT M6X1,00
706561	4	FLANGE SCREW M6X1,00-28
760733	5	STEERING LOCK ※ 製造入荷終了
745787	6	SELF BREAKING NUT M8X1,25
756617	7	CAP/KEY
743296	8	STEERING LOCK
753067	9	BLANK KEY
737918	10	REGULATOR
748568	11	STARTER RELAY
748569	12	RELAY MF
743154	13	STOP-LIGHT SWITCH (NYLON)
056310	14	CAP
737923	15	BATTERY 12V-12AH
061764	16	TUBE (PER METER)
739733	17	ELECTROLYTE 50 CL
738855	18	SCREW 4-16
756684	19	FUSE 15 A
728276	20	CLIP 23/17,4
714339	21	CLIP
061950	22	CLIP
760362	23	BRACKET
885024	24	PLASTIC COLLAR 3,6 L=281
760075	25	CAP
760749	26	CAP
743065	27	CAP
746696	28	CAP
730328	29	SELF TAPING SCREW
742956	30	ACTIVATE LOCK
726455	31	ROUND-HEAD SCREW 5X0,80-12
761365	32	CLIP
739334	33	FIBBER NUT
757085	34	FUSE 25A
725728	35	CLIP
766423	36	CLIP
726479	37	ROUND-HEAD SCREW SP4-10